13855 - TT SCREWDRIVER 10 - 53 lbf.in - SPARES LISTING

ISSUE 2
28APR22
ECN-010301

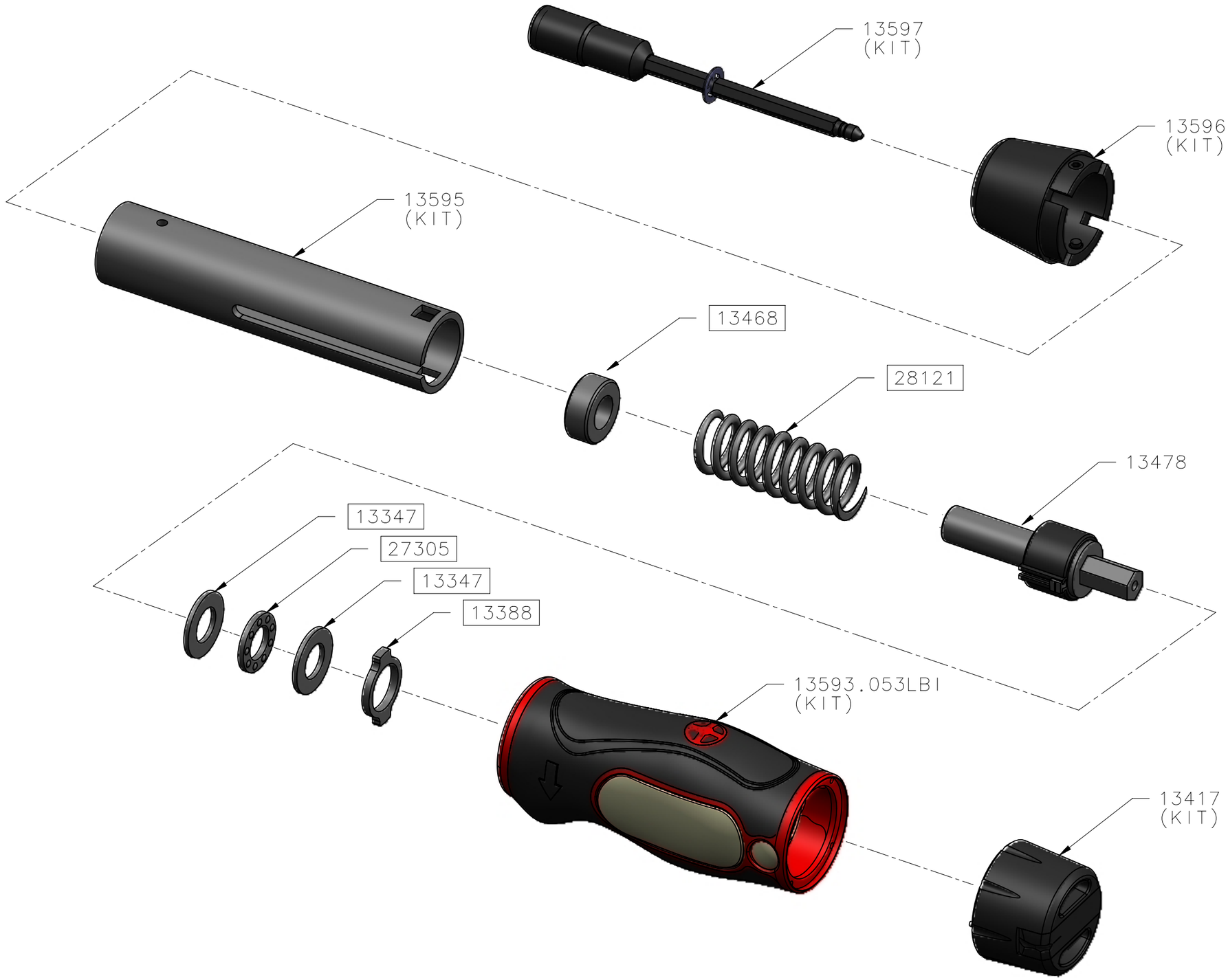

ALL BOXED PARTS ARE SUBJECT TO A MINIMUM ORDER QUANTITY